Halo Commercial

DESCRIPTION

Recessed 6-inch LED downlight provides narrow, medium or wide distribution patterns ideal for general area lighting. Lumen options range from 1000 to 4000 lumens in color temperatures of 2700K, 3000K, 3500K, and 4000K; in 80 or 90CRI. Luminaire is airtight and can be installed in new construction or below the finished ceiling in remodeling applications. Intended for healthcare, hospitality, office spaces, and institutional applications.

Catalog #		Type
Project		L13
Comments		Date
Prepared by		

SPECIFICATION FEATURES

Housing Frame
- Boat shaped galvanized steel plaster frame with adjustable plaster lip accommodates 1/2" to 1-1/2" thick ceilings
- May be installed in new construction; may be installed from below the finished (non-accessible) ceiling in remodeling (with mounting bars removed).
- Provided with (2) old work remodel clips to secure the frame to the ceiling

Universal Mounting Bracket
- Mounting bracket adjusts 2" vertically from above the ceiling or thru the aperture
- Use with the included mounting bars or with ½" EMT
- Removable to facilitate installation from below the finished ceiling

Mounting Bars
- Captive pre-installed No Fuss™ mounting bars lock to tee grid with screwdriver or pliers
- Centering mechanism allows for consistent positioning of fixtures

LED Module
- Proximity phosphors over chip on board LEDs provide a uniform source with high efficiency and no pixilation
- Available in 80 or 90 CRI minimum, accuracy within 3 SDCM provides color uniformity
- 90 CRI option: R9>50 (refer to photometry section)
- Correlated color temperature options
  - 2700K
  - 3000K
  - 3500K
  - 4000K
- Passive thermal management achieves L70 at 50,000 hours in IC and non IC applications
- Integral diffuse lens provides visual shielding
- Integral connector allows quick connection to housing flex

Lumen Options
- Nominal lumen values
  - 1000 lm
  - 1500 lm
  - 2000 lm
  - 3000 lm
  - 4000 lm

Reflector
- Self-flanged aluminum reflectors are available in narrow, medium or wide distribution patterns
- Medium distribution polymer non-conductive matte white reflector may be used to meet local codes for 'dead front' applications (Non-IC, 3000 lumen max.)
- Wall wash reflector features a rotatable insert assembly with integral linear spread lens for precise alignment of vertical illumination.
- Reflector attaches to LED module with (3) speed clamps
- Multiple painted or plated finishes are available

Reflector / Module Retention
- Reflector / module assembly is securely retained in the housing with (2) torsion springs

Driver
- Field replaceable constant current driver provides low noise operation
- UNV 120-277VAC 50/60Hz input standard
- 347VAC 50/60Hz input option (Canada only)
- Continuous, flicker-free 1% dimming with 0 -10V analog control
- Optional low voltage DC driver for use with Eaton's DLVP distributed low voltage power system combines power and control

Emergency Option
- Provides 90 minutes of standby lighting meeting most life safety codes for egress lighting
- Available with integral or remote charge indicator and test switch

Connected Lighting System Options
- WaveLinx tile mount daylight sensor includes control module, sensor and cable providing comprehensive lighting control
- LumaWatt Pro (powered by Enlighted) wireless tile mount sensor and control kit

Junction Box
- Galvanized steel junction box
- 20 in^3 internal volume excluding voltage barrier
- 25 in^3 internal total volume
- Voltage divider for 0-10V dimming wires [occupies (1) ½" pry-out space]
- Listed for (8) #12 AWG (four in, four out) 90˚ C conductors and feed-thru branch wiring
- (3) ½" and (2) ¾" trade size pry-outs available
- (3) 4-port push wire nuts for mains voltage, with 1-port for fixture connection

Compliance
- cULus Listed/Classified, wet location labeled for covered ceilings
- IP20 - Above finished ceiling; IP65 - Below finished ceiling
- Non-IC rated 3000, 4000 lumen models. Insulation must be kept 3" from top and sides.
- IC rated 1000, 1500, 2000 lumen models, and suitable for direct contact to air permeable insulation
- Not for use in direct contact with spray foam insulation, consult NEMA LSD57-2013
- Airtight per ASTM-E283-04
- Suitable for use in clothes closets when installed in accordance with the NEC 410.16 spacing requirements
- EMI/RFI emissions FCC CFR Title 47 Part 15 Class A at 120/277V & Class B at 120V
- Contains no mercury or lead and RoHS compliant
- Photometric testing in accordance with IES LM-79-08
- Lumen maintenance projections in accordance with IES LM-80-08 and TM-21-11
- 1000, 1500 and 2000 lumen 90CRI ICAT models may be used to comply with State of California Title 24 residential code, with JA8-2016-E database certification
- May be used to comply with State of California Title 24 non-residential code, as a dimmable LED luminaire
- ENERGY STAR® certified, reference certified light fixtures database

Warranty
- Five year limited warranty, consult website for details. www.eaton.com/lighting/legal

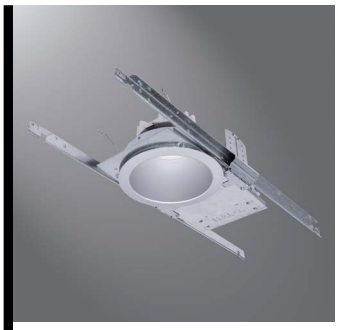

HC6
Frame

HM6
LED Module

61
61PS
Series Reflectors

6-inch Lens Downlight and Lens Wall Wash

1000/1500/2000/ 3000/4000 Lumen

ENERGY STAR

Efficiency Standards T24 California Title 24 Residential and Non-Residential Compliant

FC

Halo Commercial

ENERGY DATA

Series	1000 lumen	
Input Voltage (VAC)	120V	277V
Input Current (A)	0.085	0.042
Input Power (W)	10.1	10.9
In-rush Current (A)	0.644	1.95
In-rush Duration (ms)	0.125	0.24
THDi (%)	8.6	15.6
PF:	≥ 0.90	
(Nominal input 120-277VAC & 100% of rated output power)		
Minimum starting temperature -40°C (-40°F)		
Sound Rating: Class A standards		

Series	1500 lumen	
Input Voltage (VAC)	120V	277V
Input Current (A)	0.119	0.055
Input Power (W)	14.2	14.9
In-rush Current (A)	0.212	0.85
In-rush Duration (ms)	0.28	0.32
THDi (%)	7.8	16.3
PF:	≥ 0.90	
(Nominal input 120-277VAC & 100% of rated output power)		
Minimum starting temperature -40°C (-40°F)		
Sound Rating: Class A standards		

Series	2000 lumen	
Input Voltage (VAC)	120V	277V
Input Current (A)	0.176	0.082
Input Power (W)	21.1	21.4
In-rush Current (A)	0.588	0.624
In-rush Duration (ms)	0.3	0.38
THDi (%)	8.8	11.2
PF:	≥ 0.90	
(Nominal input 120-277VAC & 100% of rated output power)		
Minimum starting temperature -40°C (-40°F)		
Sound Rating: Class A standards		

Series	3000 lumen	
Input Voltage (VAC)	120V	277V
Input Current (A)	0.228	0.102
Input Power (W)	27.2	27
In-rush Current (A)	0.898	1.7
In-rush Duration (ms)	0.36	0.38
THDi (%)	9.7	9.3
PF:	≥ 0.90	
(Nominal input 120-277VAC & 100% of rated output power)		
Minimum starting temperature -40°C (-40°F)		
Sound Rating: Class A standards		

Series	4000 lumen	
Input Voltage (VAC)	120V	277V
Input Current (A)	0.345	0.15
Input Power (W)	41.3	40.7
In-rush Current (A)	1.05	2.23
In-rush Duration (ms)	0.32	0.34
THDi (%)	10.06	14.01
PF:	≥ 0.90	
(Nominal input 120-277VAC & 100% of rated output power)		
Minimum starting temperature -40°C (-40°F)		
Sound Rating: Class A standards		

DIMENSIONS

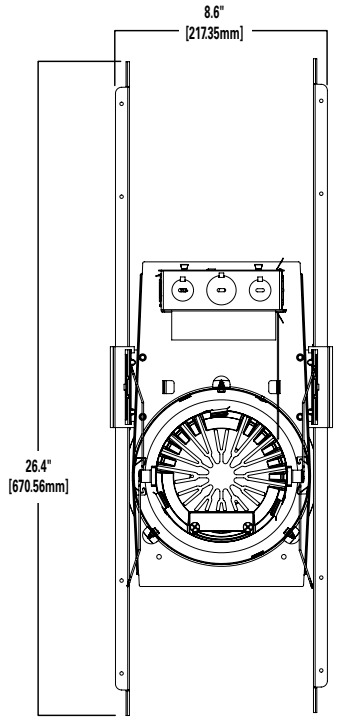

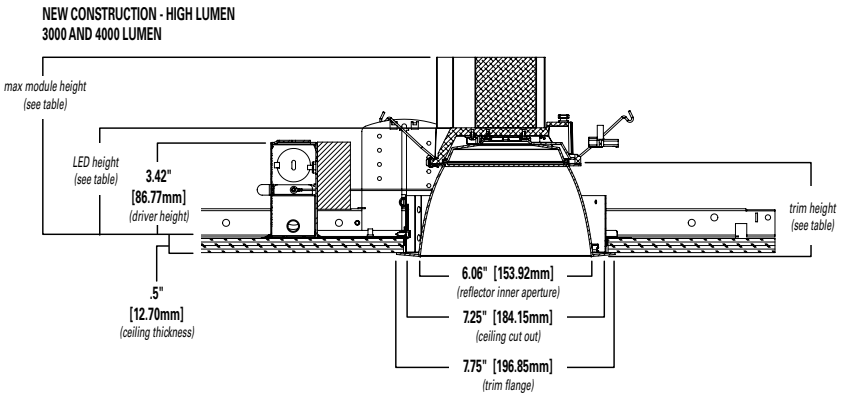

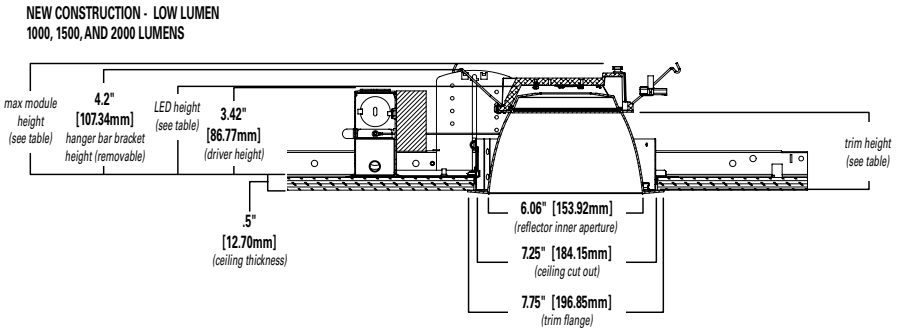

Distribution	High Lumen (3000 & 4000 Lumens) Max. Module Height	Trim Height	LED Height	Low Lumen (1000, 1500 & 2000 Lumens)* Max. Module Height	Trim Height	LED Height
Narrow	6.6"	3.4″	3.8″	4.5"	3.4″	3.8″
Medium	6.7″	3.5″	3.9″	4.6″	3.5″	3.9″
Wide	6.5″	3.3″	3.7″	4.4″	3.3″	3.7″
Baffle	6.5″	3.3″	3.7″	4.4″	3.3″	3.7″

*Max. height w/hanger bar bracket 4.2″

Ordering Information

Sample Number: HC620D010REM7 – HM612835 - 61MDC
A complete luminaire consists of a housing frame, LED module, and reflector (ordered separately)

Mounting Frame	Lumens	Input / Control	Options	Accessories
HC6 = 6" new construction and remodeler housing **HC6CP** = 6" new construction and remodeler housing, CCEA Chicago Plenum rated	**10** = 1000 lumens (nominal) **15 =** 1500 lumens (nominal) **20 =** 2000 lumens (nominal) **30 =** 3000 lumens (nominal) **40 =** 4000 lumens (nominal)	**D010** = 120-277VAC 50/60Hz 0-10V analog 1%-100% dimming **D010347** = 347VAC 50/60Hz 0-10V analog 1%-100% dimming (Canada only) [1]	**REM7** = 7 watt emergency module with remote test / indicator light, use with D010 only [1] **REM14** = 14 watt emergency module with remote test / indicator light, use with D010 only [1] **IEM7** = integral 7 watt emergency module with integral test / indicator light, use with D010 only [1] **IEM14** = integral 14 watt emergency module with integral test / indicator light, use with D010 only [1] **LWTPD1** = factory installed LumaWatt Pro wireless tile mount sensor kit, use with D010 only [1] **SWPD1** = factory installed WaveLinx tile mount daylight sensor, includes control module, sensor, and cable, use with D010 only [1]	**HB128APK** = L channel hanger bar, 26", pair (replacement) **RMB22** = Adjustable wood joist mounting bars, pair, extend to 22" long **H347** = 347 to 120V step down transformer, 75VA **H347200** = 347 to 120V step down transformer, 200VA **PORLWTPD1** = Field installed LumaWatt Pro wireless sensor kit, use with D010 only [1] **TMSWPD1** = Field installed WaveLinx wireless sensor kit, use with D010 only [1]
		DLV = Distributed Low Voltage driver, 1%-100% dimming DLV for use with Eaton's DLVP system only. Refer to DLVP low-voltage power module and DLVP specifications for details. [1]	**REMV7** = 7 watt emergency module with remote test / indicator light, use with DLV only [1, 2] **REMV14** = 14 watt emergency module with remote test / indicator light, use with DLV only [1, 2] **IEMV7** = integral 7 watt emergency module with integral test / indicator light, use with DLV only [1, 2] **IEMV14** = integral 14 watt emergency module with integral test / indicator light, use with DLV only [1, 2]	

LED Module	Lumens	CRI/CCT
HM6 = 6" LED module	**12**=1000, 1500 and 2000 lumens (nominal), use with HC610*, HC615*, HC620* housings **34**=3000 and 4000 lumens (nominal), use with HC630*, HC640* housings	**827** = 80 CRI (minimum), 2700K CCT **830** = 80 CRI (minimum), 3000K CCT **835** = 80 CRI (minimum), 3500K CCT **840** = 80 CRI (minimum), 4000K CCT **927** = 90 CRI (minimum), 2700K CCT **930** = 90 CRI (minimum), 3000K CCT **935** = 90 CRI (minimum), 3500K CCT **940** = 90 CRI (minimum), 4000K CCT

Reflector	Distribution[3]	Finish	Flange	Accessories
61 = 6" conical reflector	**ND** = narrow 55° beam angle 0.97 SC **MD** = medium 60° beam angle 1.10 SC **WD** = wide 65° beam angle 1.28 SC **RWW** = rotatable wall wash with linear spread lens	**C** = Specular clear **H** = Semi-specular clear **W** = White (white flange)	**Blank** = Polished flange standard with C & H reflectors **Blank** = White flange standard with W reflector **WF** = White flange option available with C & H reflectors	**61RWWPK** = rotatable wall wash insert for 6" reflector –replacement part kit

Baffle	Distribution[3]	Finish	Flange	Accessories
61 = 6" baffle reflector	**WD** = wide 65° beam angle 1.28 SC (nominal) **RWW** = rotatable wall wash with linear spread lens	**BB** = Black baffle (white flange) **WB** = White baffle (white flange)	**Blank** = White flange standard with BB, & WB	**61RWWPK** = rotatable wall wash insert for 6" reflector –replacement part kit

IEM Reflector	Distribution[3]	Finish	Flange	Integral Emergency
61 = 6" IEM reflector for integral emergency only	**ND** = narrow 55° beam angle 0.97 SC **MD** = medium 60° beam angle 1.10 SC **WD** = wide 65° beam angle 1.28 SC	**C** = Specular clear **H** = Semi-specular clear **W** = White (white flange)	**Blank** = Polished flange standard with C & H reflectors **Blank** = White flange standard with W reflector **WF** = White flange option available with C & H reflectors	**IEM** = Reflector for integral emergency only

IEM Baffle	Distribution[3]	Finish	Flange	Integral Emergency
61 = 6" IEM baffle reflector for integral emergency only	**WD** = wide 65° beam angle 1.28 SC (nominal)	**BB** = Black baffle (white flange) **WB** = White baffle (white flange)	**Blank** = White flange standard with BB, & WB	**IEM** = Reflector for integral emergency only

Reflector	Distribution[3]	Finish	Flange
61PS = 6" non-conductive polymer 'dead front' conical reflector[4]	**MD** = medium 60° beam angle 1.10 SC (nominal)	**W** = White (white flange)	**Blank** = White flange standard with W reflector

Notes:
1. Not available with CP version
2. ULus for U.S. only
3. Values are nominal, with specular clear reflector, other finishes and field results may vary.
4. 61PS reflector is for Non-IC environment only, and up to 3000 lumens only.

EATON
Powering Business Worldwide

Eaton
1121 Highway 74 South
Peachtree City, GA 30269
P: 770-486-4800
www.eaton.com/lighting

Specifications and dimensions subject to change without notice.

Halo Commercial

HC6
HM6
61 / 61PS

PHOTOMETRY

NARROW DISTRIBUTION - SPECULAR CLEAR FINISH, 2000 LUMEN MODEL, 80 CRI, 3500K

NARROW (55° BEAM*)

Test Number	P285970
Housing	HC620D010
Module	HM612835
Reflector	61NDC
Lumens	1920 Lm
Efficacy	96 Lm/W
SC	0.97
UGR	11.7

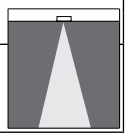

CANDLEPOWER DISTRIBUTION

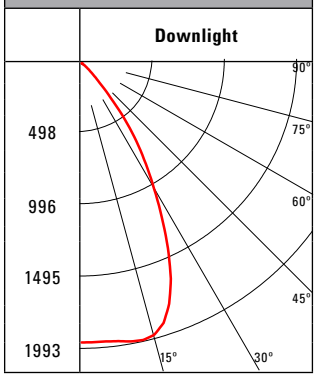

CONE OF LIGHT

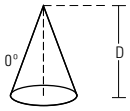

MH	FC	L	W
5.5'	64.9	5.2	5.2
7'	40	6.8	6.8
8'	30.7	7.6	7.6
9'	24.2	8.6	8.6
10'	19.6	9.6	9.6
12'	13.6	11.6	11.6

CANDELA TABLE

Degrees Vertical	Candela
0	1962
5	1962
15	1975
25	1434
35	671
45	112
55	13
65	3
75	3
85	0
90	0

ZONAL LUMEN SUMMARY

Zone	Lumens	% Fixture
0-30	1385	72.1
0-40	1796	93.5
0-60	1915	99.7
0-90	1920	100
90-180	0	0
0-180	1920	100

LUMINANCE

Average Candela Degrees	Average 0° Luminance
45	8706
55	1223
65	337
75	551
85	0

MEDIUM DISTRIBUTION - SPECULAR CLEAR FINISH, 2000 LUMEN MODEL, 80 CRI, 3500K

MEDIUM (60° BEAM*)

Test Number	P286170
Housing	HC620D010
Module	HM612835
Reflector	61MDC
Lumens	1959 Lm
Efficacy	97.9 Lm/W
SC	1.10
UGR	11.8

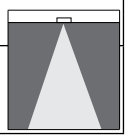

CANDLEPOWER DISTRIBUTION

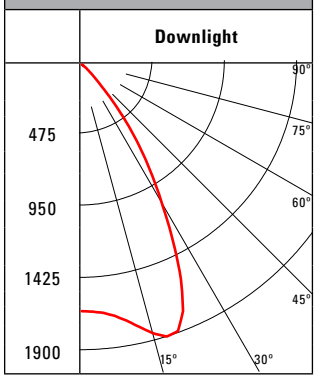

CONE OF LIGHT

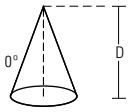

MH	FC	L	W
5.5'	55.2	5.8	5.8
7'	34.1	7.6	7.6
8'	26.1	8.6	8.6
9'	20.6	9.6	9.6
10'	16.7	10.8	10.8
12'	11.6	13	13

CANDELA TABLE

Degrees Vertical	Candela
0	1642
5	1660
15	1854
25	1576
35	699
45	120
55	15
65	5
75	3
85	0
90	0

ZONAL LUMEN SUMMARY

Zone	Lumens	% Fixture
0-30	1387	70.8
0-40	1821	93
0-60	1951	99.6
0-90	1959	100
90-180	0	0
0-180	1959	100

LUMINANCE

Average Candela Degrees	Average 0° Luminance
45	9296
55	1462
65	662
75	551
85	0

WIDE DISTRIBUTION - SPECULAR CLEAR FINISH, 2000 LUMEN MODEL, 80 CRI, 3500K

WIDE (65° BEAM*)

Test Number	P286370
Housing	HC620D010
Module	HM612835
Reflector	61WDC
Lumens	2045 Lm
Efficacy	102.3 Lm/W
SC	1.28
UGR	11.6

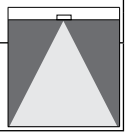

CANDLEPOWER DISTRIBUTION

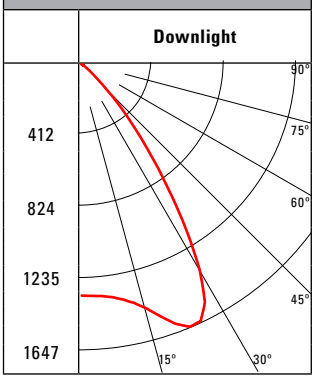

CONE OF LIGHT

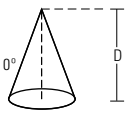

MH	FC	L	W
5.5'	44.3	7	7
7'	27.4	8.8	8.8
8'	21	10.2	10.2
9'	16.6	11.4	11.4
10'	13.4	12.6	12.6
12'	9.3	15.2	15.2

CANDELA TABLE

Degrees Vertical	Candela
0	1341
5	1349
15	1466
25	1642
35	877
45	201
55	28
65	5
75	2
85	0
90	0

ZONAL LUMEN SUMMARY

Zone	Lumens	% Fixture
0-30	1282	62.7
0-40	1835	89.7
0-60	2037	99.6
0-90	2045	100
90-180	0	0
0-180	2045	100

LUMINANCE

Average Candela Degrees	Average 0° Luminance
45	15614
55	2676
65	662
75	530
85	0

*Value are nominal with specular clear reflectors, other finishes and field results may vary.
SC = Spacing Criteria
UGR = Unified Glare Rating

Photometric Multipliers (nominal lumen values)

1000 Lumen	1500 Lumen	2000 Lumen	3000 Lumen	4000 Lumen
0.52	0.72	1.00	1.44	2.02

Multipliers for relative lumen values with other series models.

CCT Multipliers – 80CRI

2700K	3000K	3500K	4000K
0.93	0.95	1.00	1.05

Multipliers for relative lumen values with other series color temperatures.

Color Finish Multipliers

Finish code	C	H	W/WB	BB
Finish	Specular Clear	Semi-Specular	Matte White White Baffle	Black Baffle
Multiplier	1.00	0.91	0.92	0.84

Multipliers for relative lumen values with other color finishes.

CCT Multipliers – 90CRI

2700K	3000K	3500K	4000K
0.75	0.82	0.90	0.89

Multipliers for relative lumen values with other series color temperatures.

Halo Commercial

HC6
HM6
61 / 61PS

PHOTOMETRY

WALL WASH DISTRIBUTION - SPECULAR CLEAR FINISH, 2000 LUMEN MODEL, 80 CRI, 3500K

WALL WASH

Test Number	P286650
Housing	HC620D010
Module	HM612835
Reflector	61RWWC
Lumens	1798 Lm
Efficacy	89.9 Lm/W
SC	1.23

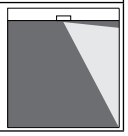

SC = Spacing Criteria, nominal for specular clear reflector, other finishes and field results may vary.

CANDLEPOWER DISTRIBUTION

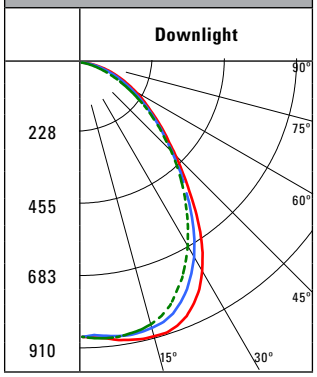

CANDELA TABLE

Degrees Vertical	Candela
0	882
5	890
15	910
25	854
35	665
45	431
55	270
65	161
75	74
85	10
90	0

ZONAL LUMEN SUMMARY

Zone	Lumens	% Fixture
0-30	696	38.7
0-40	1079	60
0-60	1629	90.6
0-90	1798	100
90-180	0	0
0-180	1798	100

LUMINANCE

Average Candela Degrees	Average 0° Luminance
45	33399
55	25825
65	20832
75	15653
85	6416

SINGLE UNIT FOOTCANDLES

2.5' from wall (distance from fixture along wall)

1	16.8	12	5.4	2	0.7	0.2	0.1
2	24.7	19.2	10.5	4.9	2.2	1	0.5
3	22.8	18.6	11.4	6.2	3.2	1.7	0.9
4	17.5	15	10.3	6.2	3.6	2	1.2
5	11.9	10.7	8.2	5.5	3.4	2.1	1.3
6	8	7.4	6.1	4.5	3.1	2	1.3
7	5.5	5.2	4.5	3.6	2.6	1.9	1.3
8	3.9	3.7	3.3	2.8	2.2	1.6	1.2
9	2.8	2.7	2.5	2.2	1.8	1.4	1.1
10	2.1	2	1.9	1.7	1.5	1.2	0.9

MULTIPLE UNIT FOOTCANDLES

	2.5' from wall (distance from fixture along wall) 3			2.5' from wall (distance from fixture along wall) 4		
1	18.8	16.6	18.8	17.5	10.7	17.5
2	29.5	29.2	29.5	26.8	20.9	26.8
3	29	29.8	29	26	22.9	26
4	23.7	25.3	23.7	21	20.5	21
5	17.4	19.2	17.4	15.4	16.3	15.4
6	12.5	13.7	12.5	11.1	12.2	11.1
7	9.1	9.8	9.1	8.1	9	8.1
8	6.7	7.1	6.7	6.1	6.7	6.1
9	5	5.3	5	4.6	5	4.6
10	3.8	4	3.8	3.5	3.8	3.5

Photometric Multipliers (nominal lumen values)

1000 Lumen	1500 Lumen	2000 Lumen	3000 Lumen	4000 Lumen
0.52	0.72	1.00	1.44	2.02

Multipliers for relative lumen values with other series models.

CCT Multipliers – 80CRI

2700K	3000K	3500K	4000K
0.93	0.95	1.00	1.05

Multipliers for relative lumen values with other series color temperatures.

Color Finish Multipliers

Finish code	C	H	W/WB	BB
Finish	Specular Clear	Semi-Specular	Matte White White Baffle	Black Baffle
Multiplier	1.00	0.91	0.92	0.84

Multipliers for relative lumen values with other color finishes.

CCT Multipliers – 90CRI

2700K	3000K	3500K	4000K
0.75	0.82	0.90	0.89

Multipliers for relative lumen values with other series color temperatures.

COLOR METRICS

TM-30-15 & CRI/CIE (3500K)

80 CRI Color Metric Summary - 3500K*

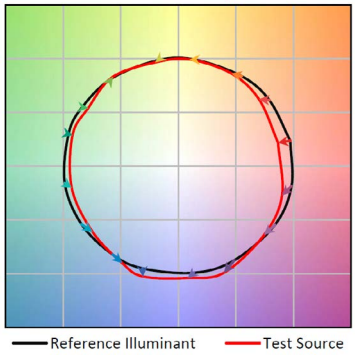

TM-30-15	R_f = 84.7
	R_g = 95.7
CRI/CIE	R_a = 85.2
	R_9 = 16.9

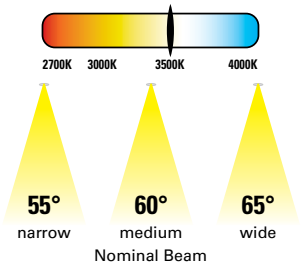

90 CRI Color Metric Summary - 3500K*

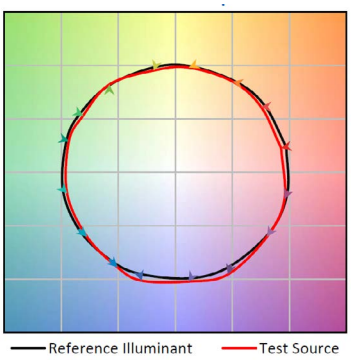

TM-30-15	R_f = 90.1
	R_g = 98.7
CRI/CIE	R_a = 92.5
	R_9 = 66.2

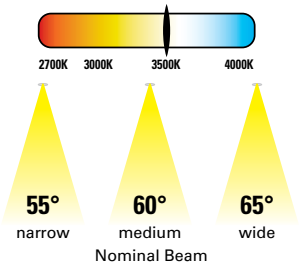

Eaton
1121 Highway 74 South
Peachtree City, GA 30269
P: 770-486-4800
www.eaton.com/lighting

Specifications and dimensions subject to change without notice.

* Color values are based on 61WDWB reflector, other finishes and field results may vary.