Invue

DESCRIPTION

The LuxeScape Collection presents a contemporary, architectural dayform providing superior uniformity and efficient illumination. Designed to enhance urban spaces with beautiful visual appearances and integral control solutions, LuxeScape integrates into any environment while providing high visibility by utilizing industry-leading WaveStream™ LED optics.

Catalog #		**Type**
Project		L12
Comments		**Date**
Prepared by		

SPECIFICATION FEATURES

Construction
Housing assembly is IP66 rated and cast from low copper content corrosion resistant aluminum, maintaining strength and precision to sustain long term dayform appearance. 3G rated construction avoids damages from installation generated vibration. Corrosion-resistant color matching hardware are minimized to enhance appearance.

Optics
Designed for complex site or pedestrian applications, WaveStream™ LED optical waveguide technology produces both symmetric NEMA Type V and asymmetric NEMA II, III, IV distributions. The waveguide is manufactured from precision injection molded acrylic delivering visual comfort and optically controlled illumination for improved glare control. Luminaire efficacy measures in excess of 100 lm/W for 4000K (+/- 275K) CCT at 70 CRI (min). Optional 3000K CCT at 70 CRI or 3000K CCT at 80 CRI also available.

Electrical
LED drivers are uniquely positioned and mounted for maximum thermal performance and extended life. Standard 0-10V dimming drivers and surge protection module are designed to withstand 10kV of transient line surge. Drivers operate at 120-277V 50/60Hz with 347V 60Hz or 480V 60Hz operation optional. Suitable for ambient temperature applications as low as -40°C (40°F) to 40°C (104°F). Limited high ambient options allow for 50°C operation.

Controls
Control options are designed to be simple, cost-effective, energy code, and regulation compliant solutions. Requires a 7-PIN NEMA twistlock photocontrol receptacle. An integrated dimming and occupancy sensor is a stand-alone control option available in On/Off (MS) and bi-level dimming (MS/ DIM) operation. The optional LumaWatt Pro system is a wireless network of luminaire-integral sensors. Each sensor is capable of motion and photo sensing, metering power consumption and wireless communication. See control options page for more details.

Mounting
Invue's aluminum round decorative pole (ARP) offering provides a seamless transition and compliments the contemporary design architecture with its unique sleek taper and base design. The tenon mount pole comes standard with an access door feature integrated into the base.

Spider & Cantilever Mount
Fitter assembly mounts over 3" O.D. tenon and can be adapted to a 2-3/8" tenon. It is secured via concealed, corrosion resistant set screw and jam screw pairs in six inconspicuous locations. Fitter design provides seamless transition to 4" O.D. round pole top. Optional mounting accessories include a twin arm mount and wall mount arm.

Finish
Eaton utilizes premium ultra-weatherable TGIC based polyester powder coatings specifically formulated to withstand extended outdoor exposure while providing decorative appeal. Finish is compliant to 3,000 hour salt spray standard (per ASTM B117). RAL and custom color matches available.

Warranty
Five-year warranty.

LXS LUXESCAPE COLLECTION

DECORATIVE LUMINAIRE

CERTIFICATION DATA

UL/cUL Listed
FCC Class A
IEC 60529 IP66 Housing
ANSI C136.31 3G Vibration
ASTM A356.0 Low Copper Alloy
ASTM B117 Salt Spray Tested
RoHS
ISO 9001
DesignLights Consortium® Qualified*
Dark Sky Approved (3000K CCT and warmer only)

ENERGY DATA

Electronic LED Driver
>0.9 Power Factor
<20% Total Harmonic Distortion
120-277V 50/60Hz, 347V 60Hz, 480V 60Hz
40°C Ambient Temperature Rating
As low as -40°C (-40°F) minimum temperature
*See MINIMUM TEMPERATURE table

EPA

Effective Projected Area: (Sq. Ft.)
Cantilever Mount: 1.3
Spider Mount: 1.6

SHIPPING DATA

Approximate Net Weight:
Cantilever Mount Weight: 46 lbs. [20.8 kgs.]
Spider Mount Weight: 53 lbs. [24 kgs.]

DIMENSIONS

Spider Mount

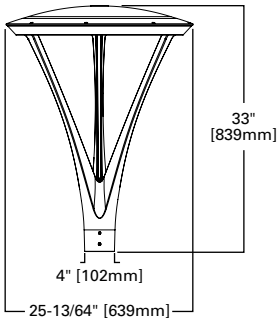

Cantilever Mount

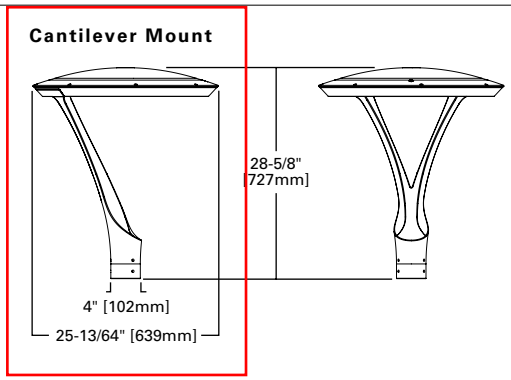

Powering Business Worldwide

*www.designlights.org

MOUNTING CONFIGURATIONS (EPAS INCLUDES FIXTURE)

Twin mount arm (shown with Cantilever mount)

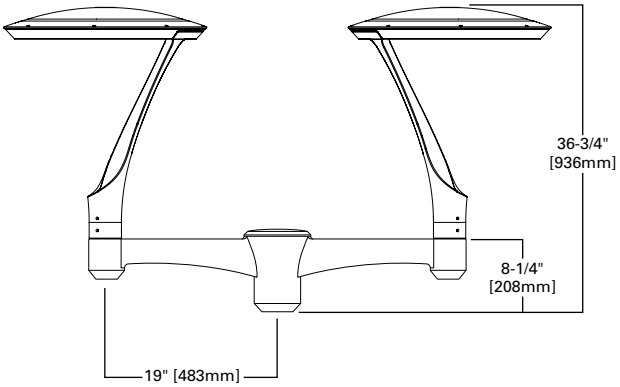

Wall mount arm (shown with Cantilever mount)

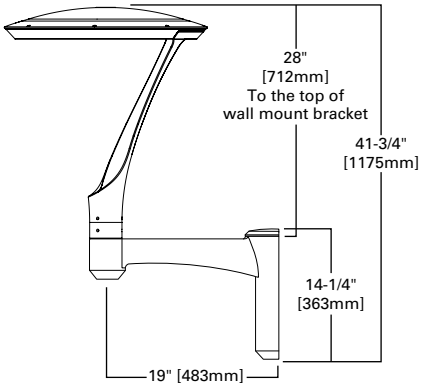

Twin mount arm (shown with Spider mount)

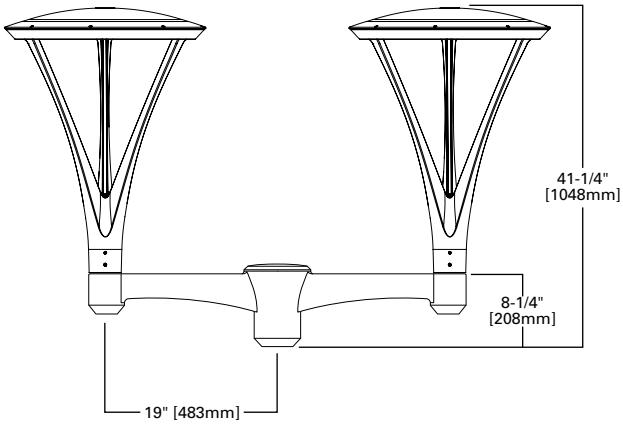

Wall mount arm (shown with Spider mount)

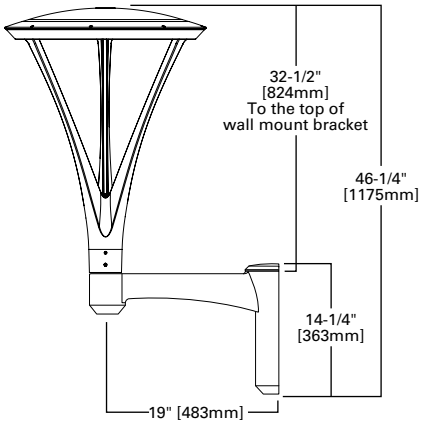

Twin mount arm (EPA 1.36)

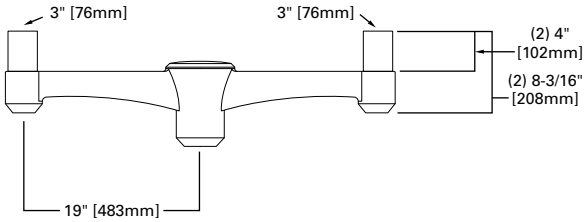

Wall Mount Arm

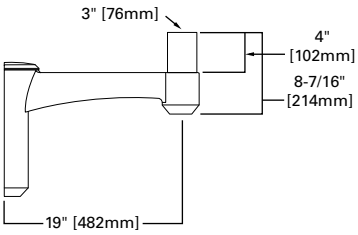

MOUNTING REQUIREMENTS CHART

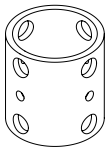

ARP2*

Pole Top O.D. (Inches)	**4"**	
Tenon O.D. (Inches)	**2-3/8" Tenon**	**3" Tenon**
Post Top	ARPA2*	Standard
Twin Mount Arm	ARPA2*	Standard

* Required for stability. Order separately.

WALL MOUNT ARM DRILL PATTERN

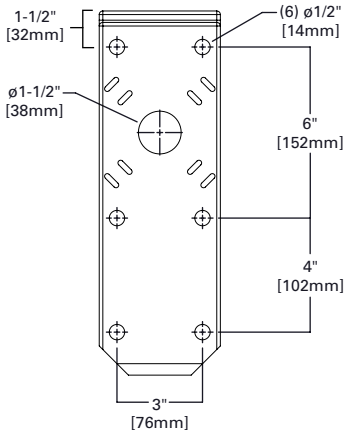

POLE CONFIGURATIONS (ARP DECORATIVE POLE SHOWN)

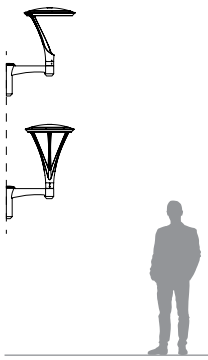

Wall mount arm
8-10 ft. Mounting heights
(Spider / Cantilever mount only)

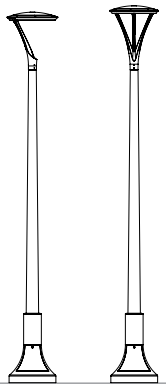

Single post top
10-18 ft. Mounting heights
(Spider / Cantilever mount only)

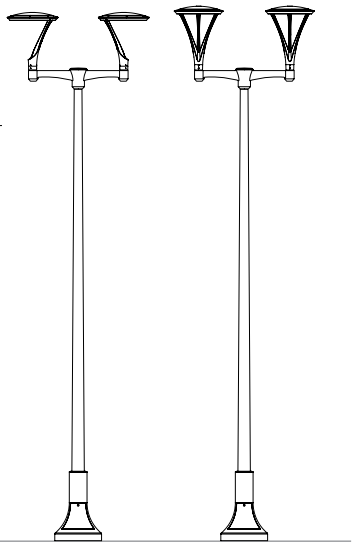

Twin mount arm
18-22 ft. Mounting heights
(Spider / Cantilever mount only)

CONTROL OPTIONS

0-10V (D) The dimming option provides 0-10V dimming wire leads for use with a lighting control panel or other control method.

Photocontrol (PER and PER7) Photocontrol receptacles provide a flexible solution to enable "dusk-to-dawn" lighting by sensing light levels. Advanced control systems compatible with NEMA 7-pin standards can be utilized with the PER7 receptacle.

Dimming Occupancy Sensor (MS) These sensors are factory installed in the luminaire housing. When a sensor for dimming operation (/DIM) option is selected, the luminaire will dim down to approximately 50 percent power after five minutes of no activity detected. When activity is detected, the luminaire returns to full light output. When a sensor for ON/OFF operation is selected, the luminaire will turn off after five minutes of no activity.

These occupancy sensors include an integral photocell that can be activated or inactivated with the programming remote / configuration tool for "dusk-to-dawn" control or "daylight harvesting". Note: For MS sensors, the factory preset is OFF (Disabled). The programming remote / tool is a wireless tool that can be utilized to change the dimming level, time delay, sensitivity and other parameters. A variety of sensor lenses are available to optimize the coverage pattern for mounting heights from 8'-40'.

For mounting heights from 8' to 12' (-L12)

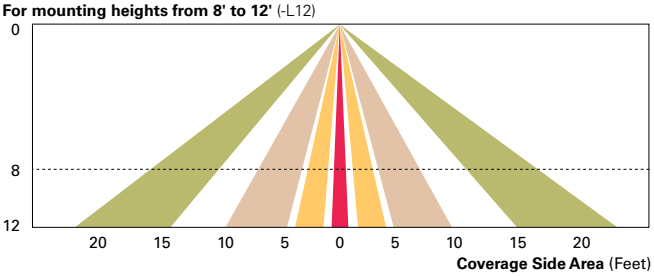

For mounting heights from 12' to 30' (-L30)

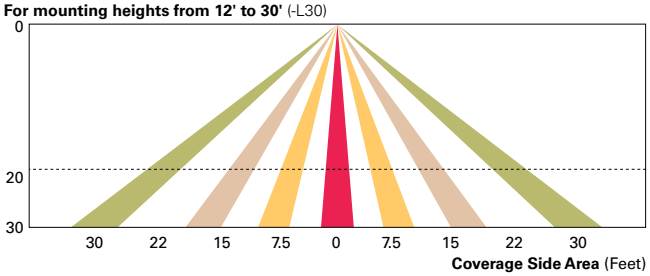

For mounting heights from 9' to 20' (-L20)

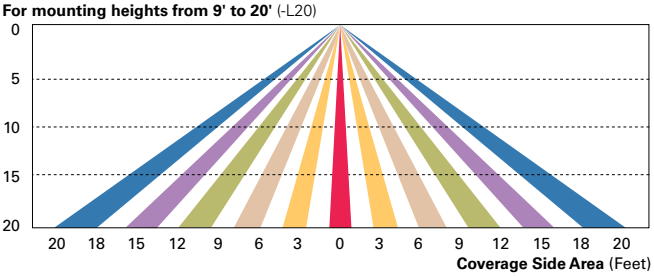

For mounting heights from 21' to 40' (-L40W)

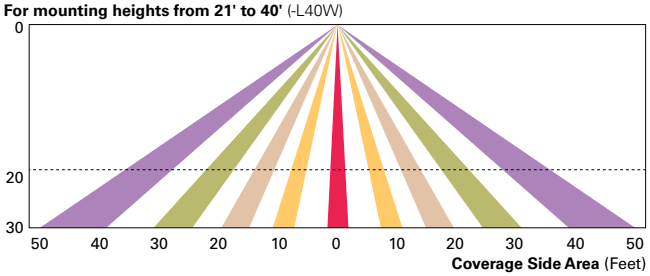

WaveLinx Wireless Control and Monitoring System Available in 7-PIN or 4-PIN configurations, the WaveLinx Outdoor control platform operates on a wireless mesh network based on IEEE 802.15.4 standards enabling wireless control of outdoor lighting. Use the WaveLinx Mobile application for set-up and configuration. At least one Wireless Area Controller (WAC) is required for full functionality and remote communication (including adjustment of any factory pre-sets).

WaveLinx Outdoor Control Module (WOLC-7P-10A) A photocontrol that enables astronomic or time-based schedules to provide ON, OFF and dimming control of fixtures utilizing a 7-PIN receptacle. The out-of-box functionality is ON at dusk and OFF at dawn.

WaveLinx Wireless Sensor (SWPD4 and SWPD5) These outdoor sensors offer passive infrared (PIR) occupancy and a photocell for closed loop daylight sensing. These sensors can be factory installed or field-installed via simple, tool-less integration into luminaires equipped with the Zhaga Book 18 compliant 4-PIN receptacle (ZW). These sensors are factory preset to dim down to approximately 50 percent power after 15 minutes of no activity detected. These occupancy sensors include an integral photocell for "dusk-to-dawn" control or daylight harvesting that is factory-enabled. A variety of sensor lenses are available to optimize the coverage pattern for mounting heights from 7'-40'.

For mounting heights from 16' to 40' (SWPD)

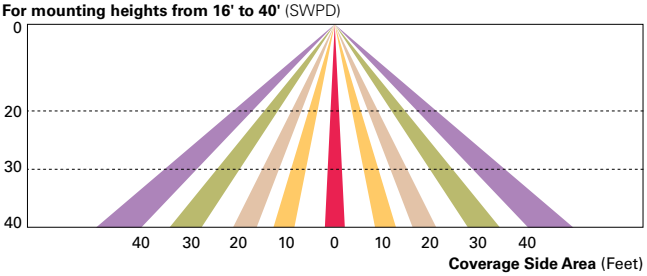

LumaWatt Pro Wireless Control and Monitoring System (LWR-LW and LWR-LN) The Eaton's LumaWatt Pro powered by Enlighted is a connected lighting solution that combines LED luminaires with an integrated wireless sensor system. The sensor controls the lighting system in compliance with the latest energy codes and collects valuable data about building performance and use. Software applications turn the granular data into information through energy dashboards and specialized apps that make it simple and help optimize the use of other resources beyond lighting.

For mounting heights from 8' to 16' (LWR-LW)

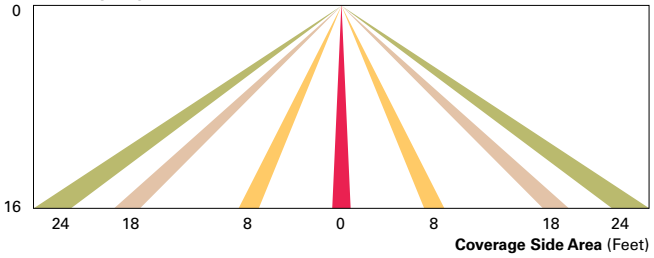

For mounting heights from 16' to 40' (LWR-LN)

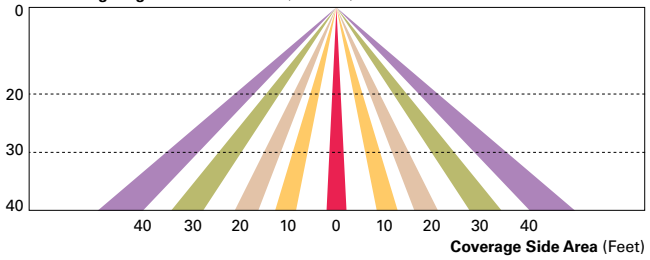

POWER AND LUMENS

Lumen Package		B1	B2	B3	B4
Drive Current					
Power Wattage (Watts)		24W	48W	96W	99W
Input Current (mA) @ 120V		200	400	800	830
Input Current (mA) @ 208V		120	240	470	480
Input Current (mA) @ 240V		100	200	400	420
Input Current (mA) @ 277V		90	180	350	360
Input Current (mA) @ 347V		79	161	325	328
Input Current (mA) @ 480V		58	117	235	237
Optics					
Type II	Spider	1,923	3,691	6,642	--
	Cantilever	2,006	3,850	6,929	--
Type III	Spider	2,265	4,347	7,823	--
	Cantilever	2,391	4,589	8,258	--
Type IV	Spider	2,374	4,557	8,200	--
	Cantilever	2,510	4,818	8,669	--
Type V	Spider	2,490	4,969	9,131	10,595
	Cantilever	2,530	5,049	9,277	10,765

LUMEN MULTIPLIER

Ambient Temperature	Lumen Multiplier
0ºC	1.02
10ºC	1.01
25ºC	1.00
40ºC	0.99
50ºC	0.97

MINIMUM AMBIENT TEMPERATURE

Lumen Package	Temperature
B1	-40°C
B2	-35°C
B3	-35°C
B4	-40°C
All DALI powered lumen packages	-20°C

BUG RATINGS

		Lumen Package			
	Distribution	**B1**	**B2**	**B3**	**B4**
Cantilever	Type II	B1-U0-G1	B2-U0-G2	B3-U0-G3	--
	Type III	B1-U1-G1	B1-U1-G2	B2-U1-G3	--
	Type IV	B1-U1-G1	B1-U1-G2	B2-U1-G3	--
	Type V	B2-U1-G1	B3-U1-G2	B3-U2-G3	B4-U2-G3
Spider	Type II	B1-U1-G1	B2-U1-G2	B3-U1-G3	--
	Type III	B1-U1-G1	B1-U1-G2	B2-U1-G2	--
	Type IV	B1-U1-G1	B1-U1-G2	B2-U1-G3	--
	Type V	B2-U1-G1	B3-U1-G2	B3-U2-G2	B4-U2-G3

COLOR TEMPERATURE

Color Temperature (CCT)	**CRI** (Nominal)	**Lumen Multiplier**
4000	70	1.00
3000	80	0.91

LUMEN MAINTENANCE

Ambient Temperature	**TM-21 Lumen Maintenance** (60,000 Hours)	**Calculated L70** (Hours)
25ºC	>91%	>230,000
40ºC	>88%	>172,000
50ºC	>86%	>142,000

NOTE: Maintenance data applies to the highest drive current and represents the worst case at the highest wattage.

ORDERING INFORMATION

Sample Number: LXS-B2-LED-D1-T2-GM-S

Product Family [1]	Lumens [2]	Lamp Type [4]	Voltage	Distribution	Color	Mounting
LXS=LuxeScape Collection	**B1**=Nominal 2,300 Lumens **B2**=Nominal 4,500 Lumens **B3**=Nominal 8,500 Lumens **B4**=Nominal 9,500 Lumens [3]	**LED**=Solid State Light Emitting Diodes	**D1**=Dimming Driver (120-277V) **347**=347V [5] **480**=480V [5, 6]	**T2**=Type II **T3**=Type III **T4**=Type IV **T5**=Type V	**AP**=Grey **BZ**=Bronze **BK**=Black **DP**=Dark Platinum **GM**=Graphite Metallic **WH**=White **CC**=Custom Color [7]	**S**=Spider Mount **C**=Cantilever Mount

Options (Add as Suffix)	**Accessories** (Order Separately) [20]
7030=70 CRI / 3000K CCT [8] **8030**=80 CRI / 3000K CCT [8] **PC**=Button Type Photocontrol (Must specify voltage) [9] **PER**=Standard 3-PIN Photocontrol Receptacle [9] **PER7**=NEMA 7-PIN Twistlock Photocontrol Receptacle [9, 10] **HA**=50°C High Ambient [11] **MS-L08**=Motion Sensor for ON/OFF Operation, Maximum 8' Mounting Height [12, 13, 14] **MS-L20**=Motion Sensor for ON/OFF Operation, 9' - 20' Mounting Height [12, 13, 15] **MS-L40W**=Motion Sensor for ON/OFF Operation, 21' - 40' Mounting Height (Wide Range) [12, 13, 16] **MS/DIM-L08**=Motion Sensor for Dimming Operation, Maximum 8' Mounting Height [12, 13, 14] **MS/DIM-L20**=Motion Sensor for Dimming Operation, 9' - 20' Mounting Height [12, 13, 15] **MS/DIM-L40W**=Motion Sensor for Dimming Operation, 21' - 40' Mounting Height (Wide Range) [12, 13, 16] **LWR-LW**=LumaWatt Pro Wireless Sensor, Wide Lens 8' - 16' Mounting Height [17] **LWR-LN**=LumaWatt Pro Wireless Sensor, Narrow Lens 16' - 40' Mounting Height [17] **5LTD**=Fifth Light Dali Driver [18] **DIM**=0-10V External Dimming Leads [19] **VS**=Tempered Glass Vandal Shield **ZW**=WaveLinx-enabled 4-PIN Twistlock Receptacle [24, 25] **ZW-SWPD4WH**=Wavelinx Wireless Sensor, 7′ – 15′ Mounting Height, White [24, 25] **ZW-SWPD4BZ**=Wavelinx Wireless Sensor, 7′ – 15′ Mounting Height, Bronze [24, 25] **ZW-SWPD5WH**=Wavelinx Wireless Sensor, 15′ – 40′ Mounting Height, White [24, 25] **ZW-SWPD5BZ**=Wavelinx Wireless Sensor, 15′ – 40′ Mounting Height, Bronze [24, 25]	**FSIR-100**=Wireless Configuration Tool for Occupancy Sensor [21] **WOLC-7P-10A**=WaveLinx Outdoor Control Module (7-PIN) [22] **ARPA2**=2-3/8" O.D. Tenon Sleeve Adapter [23] **VA6028-XX**=Twin Mount Arm (EPA 1.36 sq./ft.) [20, 23] **VA6029-XX**=Wall Mount Arm [20, 23] **SWPD4WH**=Wavelinx Wireless Sensor, 7′ – 15′ Mounting Height, White [24, 25, 26] **SWPD4BZ**=Wavelinx Wireless Sensor, 7′ – 15′ Mounting Height, Bronze [24, 25, 26] **SWPD5WH**=Wavelinx Wireless Sensor, 15′ – 40′ Mounting Height, White [24, 25, 26] **SWPD5BZ**=Wavelinx Wireless Sensor, 15′ – 40′ Mounting Height, Bronze [24, 25, 26]

NOTES:
1. Customer is responsible for engineering analysis to confirm pole and fixture compatibility for all applications. Refer to our white paper WP513001EN for additional information.
2. Lumens are nominal. See lumen table for more information.
3. B4 only available with Type V distribution.
4. Standard 4000K CCT, nominal 70 CRI.
5. Requires the use of a step down transformer.
6. Only for use with 480V Wye systems. Per NEC, not for use with ungrounded systems, impedance grounded systems or corner grounded systems (commonly known as Three Phase Three Wire Delta, Three Phase High Leg Delta and Three Phase Corner Grounded Delta systems).
7. Custom and RAL color matching available upon request. Consult your lighting representative at Eaton for more information.
8. Extended lead times apply. Use dedicated IES files when performing layouts.
9. Not available with MS-LXX, MS/DIM-LXX, LWR-LW, LWR-LN or 347V or 480V options.
10. Compatible with standard 3-PIN photocontrols and 5-PIN or 7-PIN ANSI controls.
11. Not available with Type II, III and IV B3 optics.
12. Not available with HA option.
13. The FSIR-100 configuration tool is required to adjust parameters including high and low modes, sensitivity, time delay, cutoff and more. Consult you lighting representative at Eaton for more information.
14. Approximately 22' detection diameter at 8' mounting height.
15. Approximately 40' detection diameter at 20' mounting height.
16. Approximately 100' detection diameter at 40' mounting height.
17. LumaWatt Pro wireless sensors are factory installed and require network components LWP-EM-1, LWP-GW-1, and LWP-Po in appropriate quantities. See www.eaton.com/lighting for LumaWatt Pro application information.
18. Only available with B3 and B4 lumen packages.
19. Low voltage control leads brought out 18" outside fixture. Not available with control options.
20. Replace XX with color designation.
21. This tool enables adjustment of parameters including high and low modes, sensitivity, time delay, cutoff and more. Consult your lighting representative at Eaton for more information.
22. Requires 7-PIN NEMA twistlock photocontrol receptacle. WOLC-7P-10A cannot be used in conjunction with additional sensors or controls.
23. Not vibration rated at this time. Consult your lighting representative at Eaton for more information.
24. Cannot be used in conjunction with photocontrol or other controls systems (P, R, MS, LWR).
25. WAC Gateway required to enable field-configurability. Order WAC-POE and WPOE-120 (10V to POE injector) power supply if needed. Only compatible with WaveLinx system and software and requires system components to be installed for operation. See website for more WaveLinx application information.
26. Requires ZW.

ARP ORDERING INFORMATION (ALUMINUM DECORATIVE POLE)

SAMPLE NUMBER: ARP5L310ABZ2

Product Family	Shaft Size (Inches) [1]	Wall Thickness (Inches)	Pole Top Diameter (Inches)	Mounting Height (Feet)	Base Type	Finish	Mounting Type	Number and Location of Arms	Options (Add as Suffix)
ARP=Aluminum Round Tapered Decorative	**5**=5"	**L**=0.156" **M**=0.188"	**3**=3" O.D. [2] **6**=4" O.D. [3]	**10**=10' **12**=12' **14**=14' **16**=16' **18**=18' [4] **22**=22' [4]	**A**=Aluminum (Round 4-Bolt Pole)	**AP**=Grey **BA**=Anodized Bronze **BK**=Black **BZ**=Bronze **CA**=Anodized Clear **DA**=Anodized Black **DP**=Dark Platinum **GM**=Graphite Metallic **GN**=Hartford Green **WH**=White	**2**=2-3/8" O.D. Tenon (4" Long) **5**=3" O.D. Tenon (4" Long)	**X**=None	**C**=Convenience Outlet [5] **E**=GFCI Convenience Outlet [5] **G**=Ground Lug **V**=Vibration Dampener [4]

NOTES 1 All shaft sizes nominal. **2** Provides 3" O.D. pole top suited for Arbor Post Top. **3** Provides 4" O.D. pole top suited for LuxeScape post tops. **4** Vibration damper recommended over 18 feet add suffix "V" to catalog number. **5** Specify outlet location. Receptacle not included, provision only.

ANCHORAGE DATA

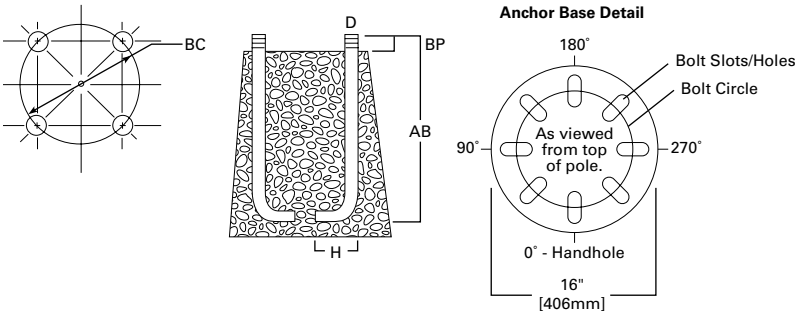

ACCESS DOOR

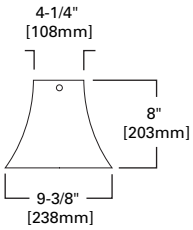

Pole	Anchor Bolt and Template Package	Shaft Diameter (inches)	Bolt Circle (inches)	Number of Bolts	Bolt Size (inches)	Template Only
Aluminum Round Decorative Pole (ARP)	317AVE30	4 x 5	9	4	3/4 x 17	407040D

Effective Projected Area (At Pole Top)

Mounting Height (Feet)	**Catalog Number**	**Wall Thickness** (Inches)	**Bolt Circle Diameter** (Inches)	**Anchor Bolt Projection** (Inches)	**Shaft Taper** (Inches)	**Anchor Bolt Diameter x Length x Hook** (Inches)	**Net Weight** (Pounds)	**Maximum Effective Projected Area** (Square Feet) (1.3 gust factor)			**Max. Load** (Pounds)
MH			**BC**	**BP**	**B**	**AB** [1]		**80 mph**	**90 mph**	**100 mph**	
10	ARP5L310A	0.156	9.0	3.5	5 x 3	3/4 x 17 x 3	57	20.0	17.5	14.1	120
10	ARP5L610A	0.156	9.0	3.5	5 X 4	3/4 x 17 x 3	57	17.0	13.3	10.7	120
12	ARP5L312A	0.156	9.0	3.5	5 x 3	3/4 x 17 x 3	62	18.2	14.1	11.2	120
12	ARP5L612A	0.156	9.0	3.5	5 X 4	3/4 x 17 x 3	62	14.1	10.9	8.7	120
14	ARP5L314A	0.156	9.0	3.5	5 x 3	3/4 x 17 x 3	67	14.8	11.4	9.0	120
14	ARP5L614A	0.156	9.0	3.5	5 X 4	3/4 x 17 x 3	67	11.7	9.0	7.1	120
16	ARP5L316A	0.156	9.0	3.5	5 x 3	3/4 x 17 x 3	72	12.0	9.1	7.0	120
16	ARP5L616A	0.156	9.0	3.5	5 X 4	3/4 x 17 x 3	72	9.4	7.1	5.6	120
18	ARP5L318A	0.156	9.0	3.5	5 x 3	3/4 x 17 x 3	77	9.5	7.1	5.4	120
18	ARP5L618A	0.156	9.0	3.5	5 X 4	3/4 x 17 x 3	77	7.6	5.6	4.3	120
18	ARP5M618A	0.188	9.0	3.5	5 X 4	3/4 x 17 x 3	83	9.5	7.1	5.6	120

Effective Projected Area (18" Above Pole Top)

Mounting Height (Feet)	**Catalog Number**	**Wall Thickness** (Inches)	**Bolt Circle Diameter** (Inches)	**Anchor Bolt Projection** (Inches)	**Shaft Taper** (Inches)	**Anchor Bolt Diameter x Length x Hook** (Inches)	**Net Weight** (Pounds)	**Maximum Effective Projected Area** (Square Feet) (1.3 gust factor)			**Max. Load** (Pounds)
MH			**BC**	**BP**	**B**	**AB** [1]		**80 mph**	**90 mph**	**100 mph**	
10	ARP5L310A	0.156	9.0	3.5	5 x 3	3/4 x 17 x 3	57	19.6	15.3	12.3	120
10	ARP5L610A	0.156	9.0	3.5	5 X 4	3/4 x 17 x 3	57	17.0	13.3	10.7	120
12	ARP5L312A	0.156	9.0	3.5	5 x 3	3/4 x 17 x 3	62	16.1	12.5	9.9	120
12	ARP5L612A	0.156	9.0	3.5	5 X 4	3/4 x 17 x 3	62	14.1	10.9	8.7	120
14	ARP5L314A	0.156	9.0	3.5	5 x 3	3/4 x 17 x 3	67	13.2	10.1	8.0	120
14	ARP5L614A	0.156	9.0	3.5	5 X 4	3/4 x 17 x 3	67	11.7	9.0	7.1	120
16	ARP5L316A	0.156	9.0	3.5	5 x 3	3/4 x 17 x 3	72	10.6	8.0	6.2	120
16	ARP5L616A	0.156	9.0	3.5	5 X 4	3/4 x 17 x 3	72	9.4	7.1	5.6	120
18	ARP5L318A	0.156	9.0	3.5	5 x 3	3/4 x 17 x 3	77	8.5	6.4	4.8	120
18	ARP5L618A	0.156	9.0	3.5	5 X 4	3/4 x 17 x 3	77	7.6	5.6	4.3	120
18	ARP5M618A	0.188	9.0	3.5	5 X 4	3/4 x 17 x 3	83	9.5	7.1	5.6	120

Eaton
1121 Highway 74 South
Peachtree City, GA 30269
P: 770-486-4800
www.eaton.com/lighting

Specifications and dimensions subject to change without notice.